Axxess 10-Channel Digital Signal Processor

INTERFACE FEATURES

- 31 Band graphic EQ
- 6 Inputs, 10 individually assignable outputs
- Independent equalization on each of the 10 outputs
- Independent high pass, low pass, and bandpass filters
- Each channel can be delayed independently up to 10ms
- Chime control for GM/Chrysler vehicles
- Clipping detection and limiting circuits
- Bass knob included
- Retains OE voice prompts (SYNC® and OnStar®)
- Retains factory chimes including parking sensor and cross path detection alerts
- Settings adjusted via Bluetooth® in a smart device application (tablet or mobile phone), compatible with both Android and Apple devices
- Read, write, and store configurations for future recall
- Password protect feature available in the mobile app
- Micro-B USB updatable

TABLE OF CONTENTS

Preface 2
Installation Options 2
Installation 3
Connections 4-7
AXDSP-X app 8-17
Pinout 18
Specifications 19

INTERFACE COMPONENTS

- AXDSP-X interface
- AXDSP-X harness (16-pin & 20-pin)

TOOLS & INSTALLATION ACCESSORIES REQUIRED

- Crimping tool and connectors, or solder gun, solder, and heat shrink • Tape • Wire cutter
- Zip ties • Multimeter

Google Play Store

Apple App Store
iOS 12.1 or higher

© COPYRIGHT 2020 METRA ELECTRONICS CORPORATION

PREFACE

In the following section, **Installation Options**, choose the installation type, then either click on the hyperlink, or reference the page number.

The AXDSP-X provides a 12v 1-amp output to turn on an aftermarket amplifier. If installing multiple amplifiers, an SPDT automotive relay will be required if the current exceeds that amount. Use Metra part number **E-123** (sold separately) for best results.

The AXDSP-X can also grow as your stereo system grows. Start off by adding a subwoofer, then add on from there. Simply reference the **Installation Options** page to change the AXDSP-X to the new system. All 10 channels of the AXDSP-X can be assigned however needed for the installation at hand. If 10 channels of a subwoofer signal is needed, the AXDSP-X can do it.

INSTALLATION OPTIONS

Aftermarket radio system:

The AXDSP-X can be used with an aftermarket radio to improve the overall listening experience for car audio enthusiasts. Installers will connect the RCA inputs from the AXDSP-X to the outputs from the aftermarket radio; **Front**, **Rear**, **Sub** (sub is optional).
(refer to page 4)

Adding a subwoofer to an existing radio:

This feature offers the Installer the ability to add an aftermarket subwoofer to an existing radio. (refer to page 5)

Full range system to an existing radio:

This option allows the Installer to wire the AXDSP-X directly to the speaker outputs from an existing radio for a full range audio signal (high-level).
(refer to page 6)

INSTALLATION

1. Complete all necessary connections to the radio and vehicle, but leave the amp turn-on wire disconnected.
2. Plug the 20-pin AXDSP-X harness into the AXDSP-X.
3. Plug the 16-pin AXDSP-X harness into the AXDSP-X.
4. Download and install the AXDSP-X app from the **Google Play Store** or **Apple App Store**.
5. Using the app, select the vehicle.
6. Connect the amp turn-on wire from the AXDSP-X.
7. Adjust the DSP settings in the app as desired. Refer to the instructions starting on (page 7) for an explanation of each tab in the app. (refer to page 7)

AFTERMARKET RADIO SYSTEM

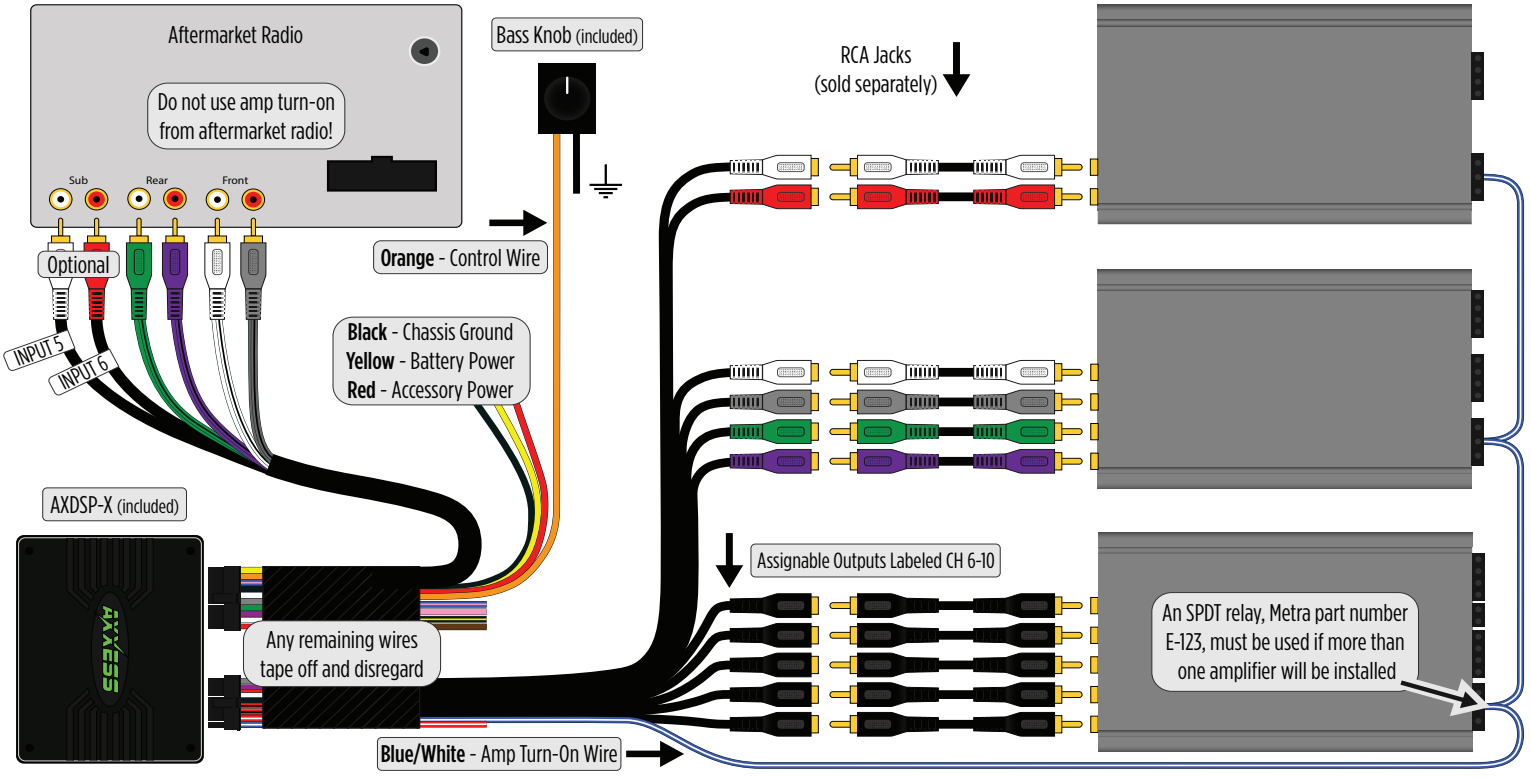

ADDING A SUBWOOFER TO AN EXISTING RADIO

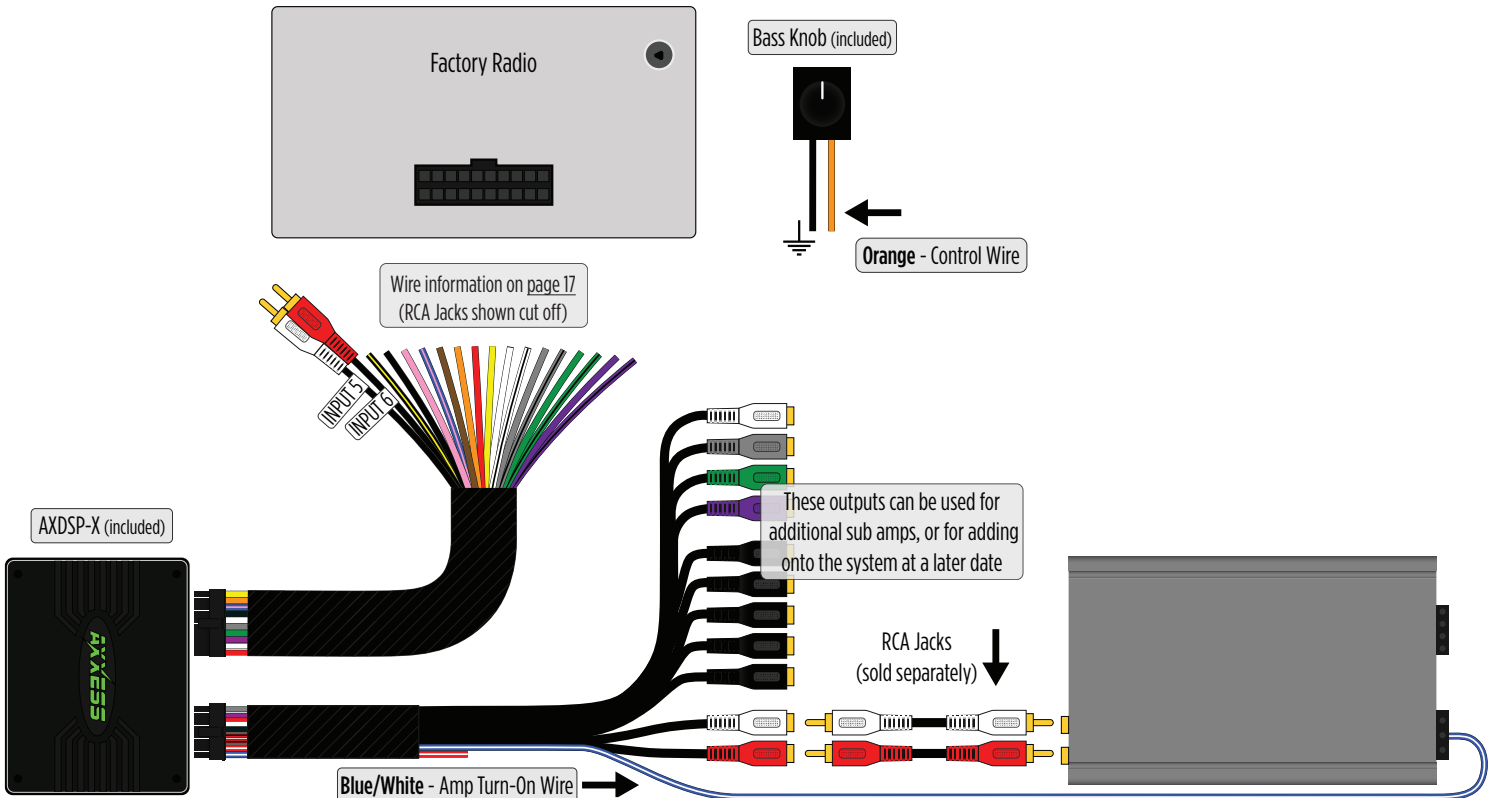

FULL RANGE SYSTEM TO AN EXISTING RADIO

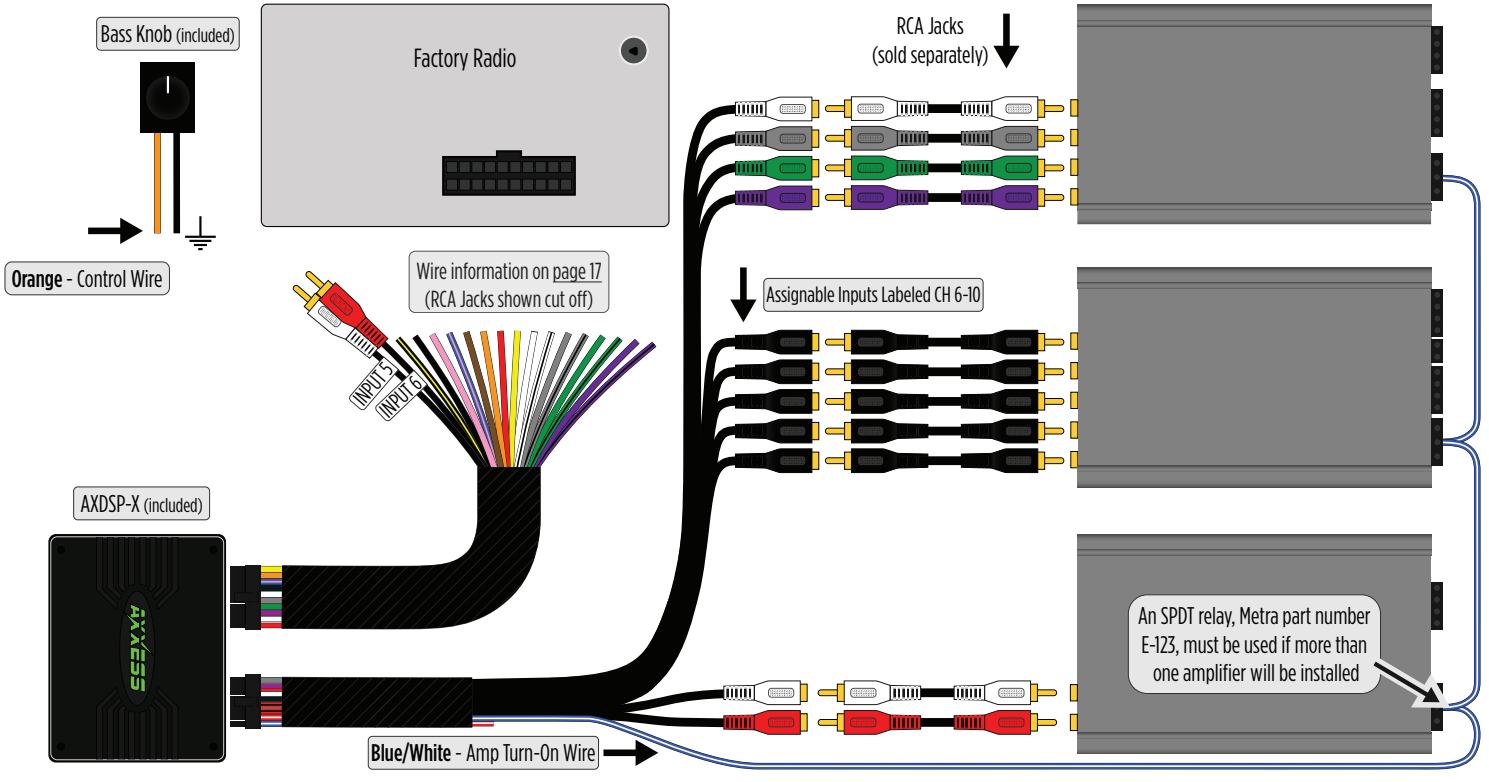

Setup Instructions

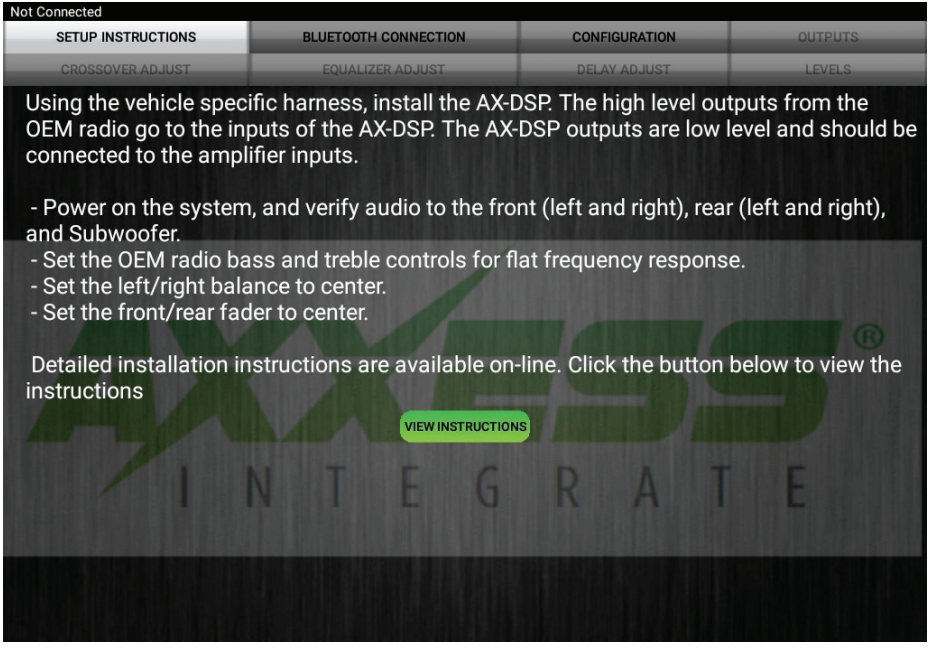

- General information tab for installing the AXDSP-X.

Continued on the next page

Bluetooth Connection

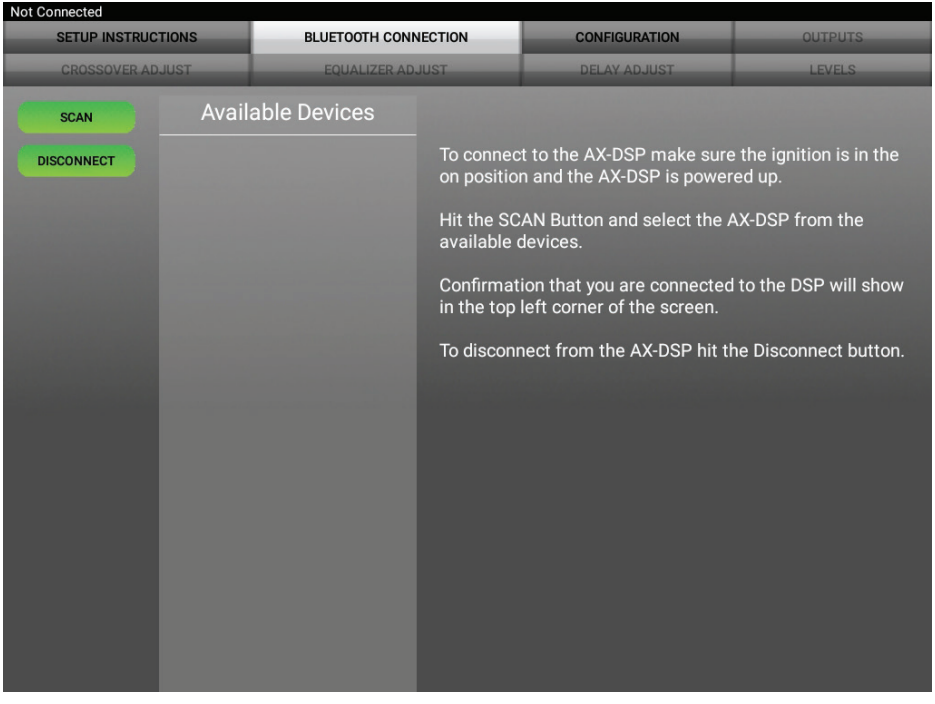

- **Scan** - Press this button to start the Bluetooth pairing process, then select the AXDSP-X from the mobile device. The AXDSP-X must be powered during this process. Confirmation that you are connected will show in the top left corner of the app.
- **Disconnect** - Disconnects the AXDSP-X from the app.

Continued on the next page

Configuration

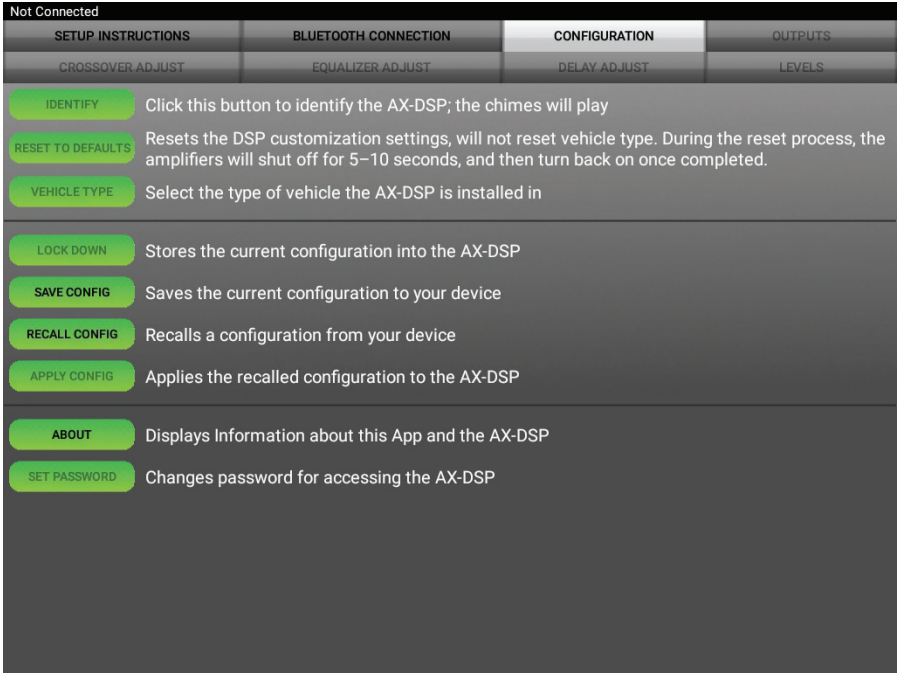

- **Identify** - Click this button to confirm that the AXDSP-X is connected properly. If so, a chime will be heard from the front left speaker.
- **Reset to Defaults** - Resets the AXDSP-X to factory settings. During the reset process the amplifiers will shut off for 5-10 seconds.
- **Vehicle Type** - Select the vehicle type from the drop down box, select either **Without OE Amplifier** or **With OE Amplifier**, then click the apply button.
- **Lock Down** - Click this button to save the selected settings.

  Attention! This button must be selected before closing the app or cycling the key otherwise all settings will be lost.
- **Save Configuration** - Saves the current configuration to the mobile device.
- **Recall Configuration** - Recalls a configuration from the mobile device.

Continued on the next page

Configuration (Cont.)

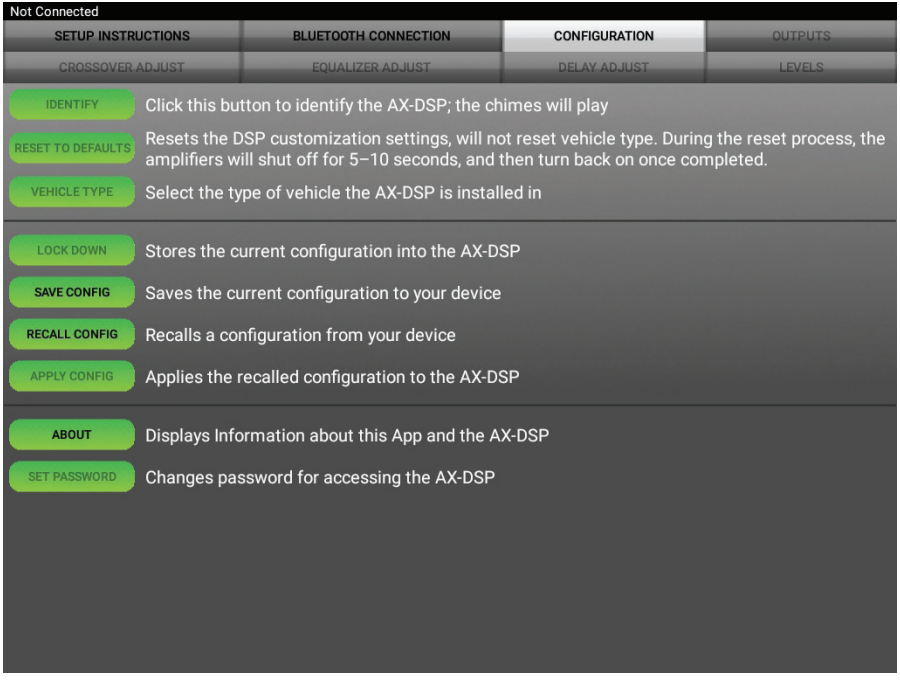

- **Apply Configuration** - Allows a recalled configuration to the AXDSP-X. The AXDSP-X will need to be locked down to save the recalled configuration. This process will shut the amplifier off between 5-10 seconds while the configuration is uploaded to the AXDSP-X.
- **About** - Displays information about the app, vehicle, AXDSP-X, and mobile device.
- **Set Password** - Assign a 4-digit password to lock the AXDSP-X. If no password is desired, use “0000”. This will clear out any currently set password. It is not necessary to lock down the AXDSP-X when setting a password.

  Note: A 4-digit only password must be chosen otherwise the interface will show “password not valid for this device”.

Continued on the next page

Outputs

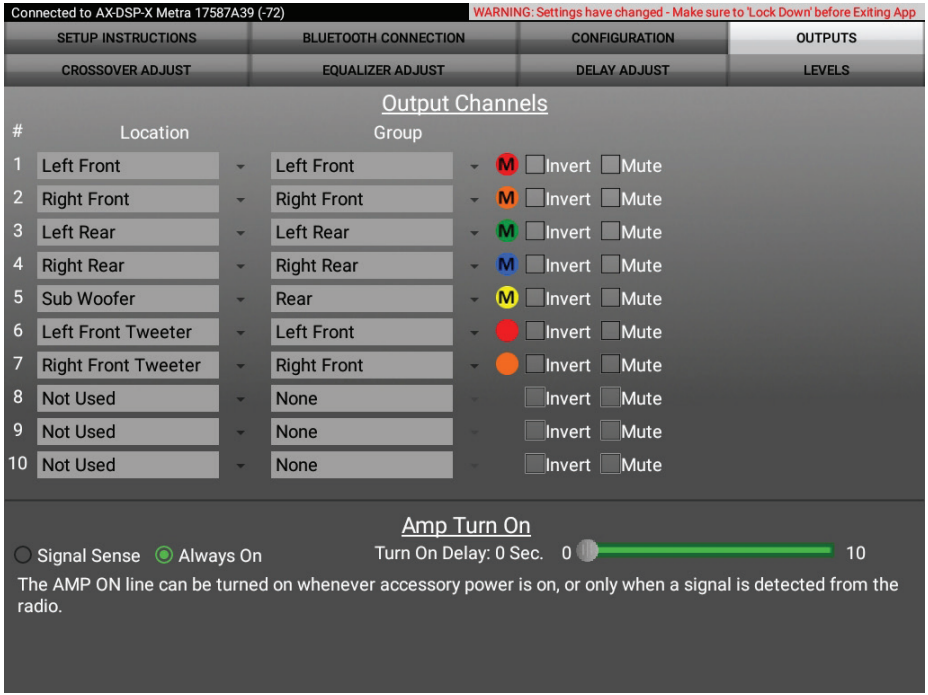

Output Channels

- **Location** - Location of speaker.
- **Group** - Used to join channels together. Example, left front woofer/midrange and left front tweeter will be considered simply left front to the AXDSP-X. The letter **M** denotes the speaker assigned as the master speaker.
- **Invert** - Will invert the phase of the speaker.
- **Mute** - Will mute desired channel(s) for tuning individual channels.

Amp Turn On

- **Signal Sense** - Will turn the amplifier on when an audio signal is detected, and keep on for 10 seconds past the last signal. This ensures the amplifier doesn't shut off between tracks.
- **Always On** - Will keep the amplifiers on as long as they is cycled on.
- **Turn on Delay** - Can be used to delay amp turn-on to avoid turn-on pops.

Continued on the next page

Crossover Adjust

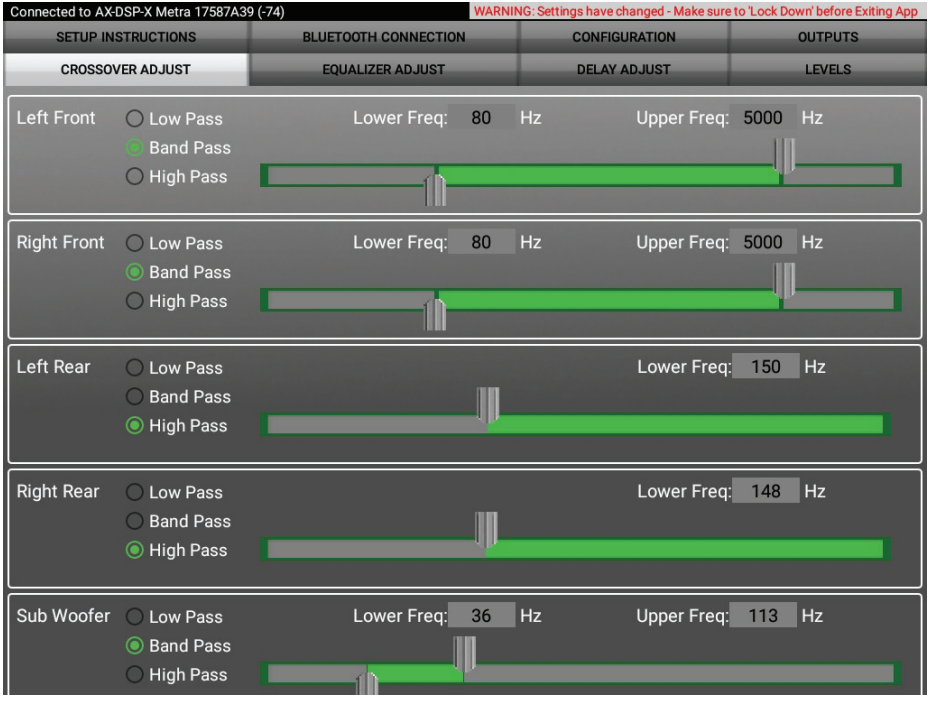

- If installing a subwoofer, the front and rear outputs will default to a 100Hz high pass filter to keep the low frequency signals out of the full range speakers. If a subwoofer is not being installed, change the front and rear crossover points down to 20Hz for a full range signal, or to the lowest frequency the speakers will play to.
- Selecting **High Pass** and **Low Pass** will provide one crossover frequency adjustment. Selecting **Band Pass** will provide two crossover frequency adjustments, one for low pass, and one for high pass.

Continued on the next page

Equalizer Adjust

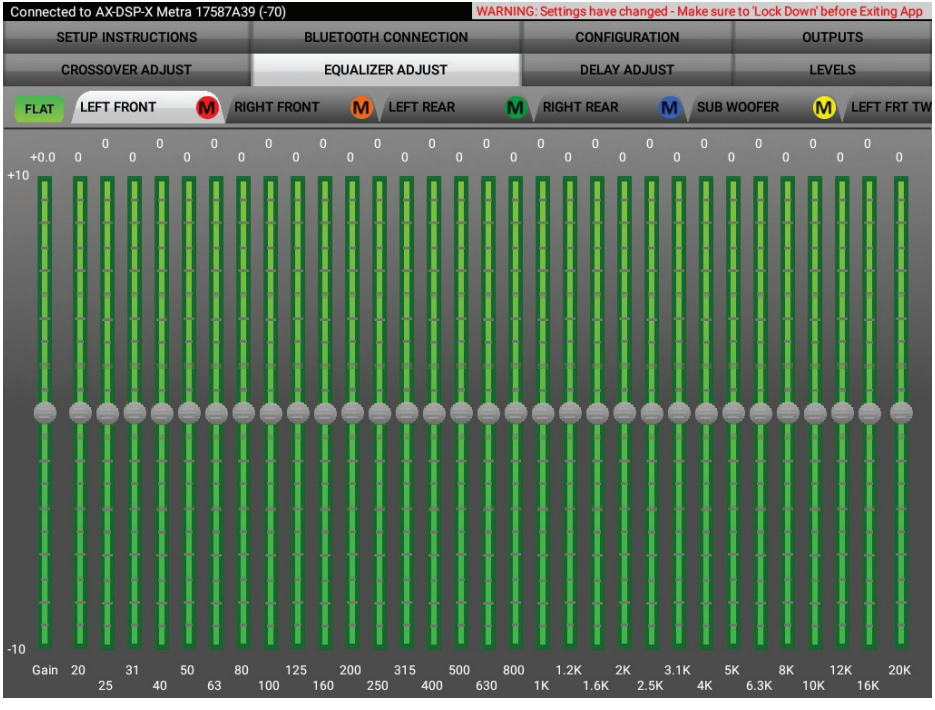

- All channels can be adjusted independently within this tab with 31 bands of available equalization. It is best to tune this by using an RTA (Real Time Analyzer).
- The **Gain** slider on the far left is for the channel selected.

Continued on the next page

Delay Adjust

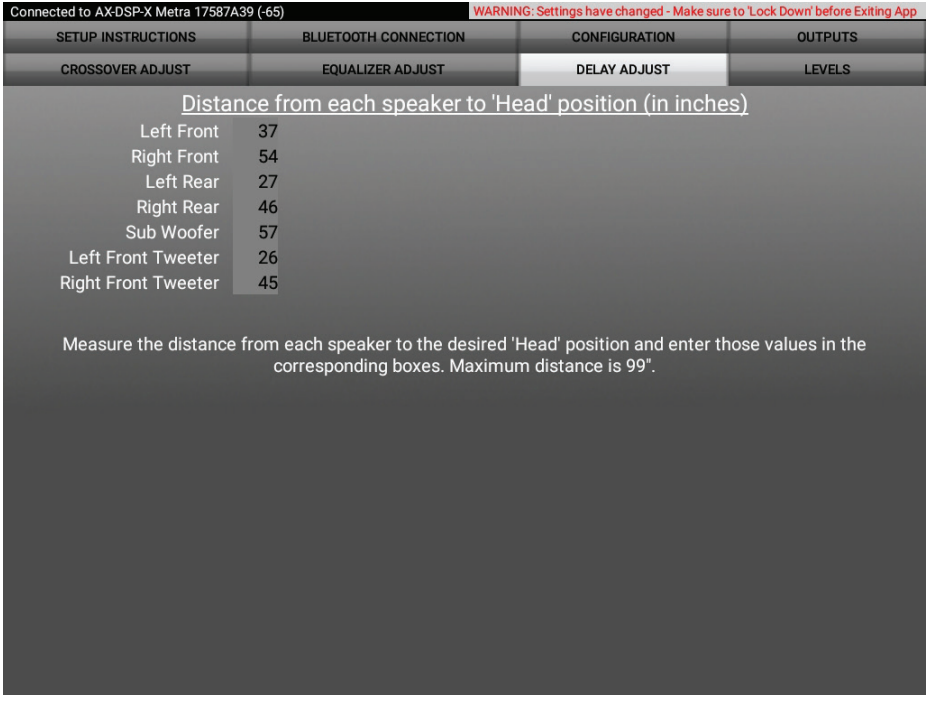

- Allows a delay of each channel, up to 10 milliseconds. First measure the distance (in inches) from each speaker to the listening position, then enter those values. If a delay is desired, add to the desired channel(s), up to 99 inches.

Continued on the next page

Levels

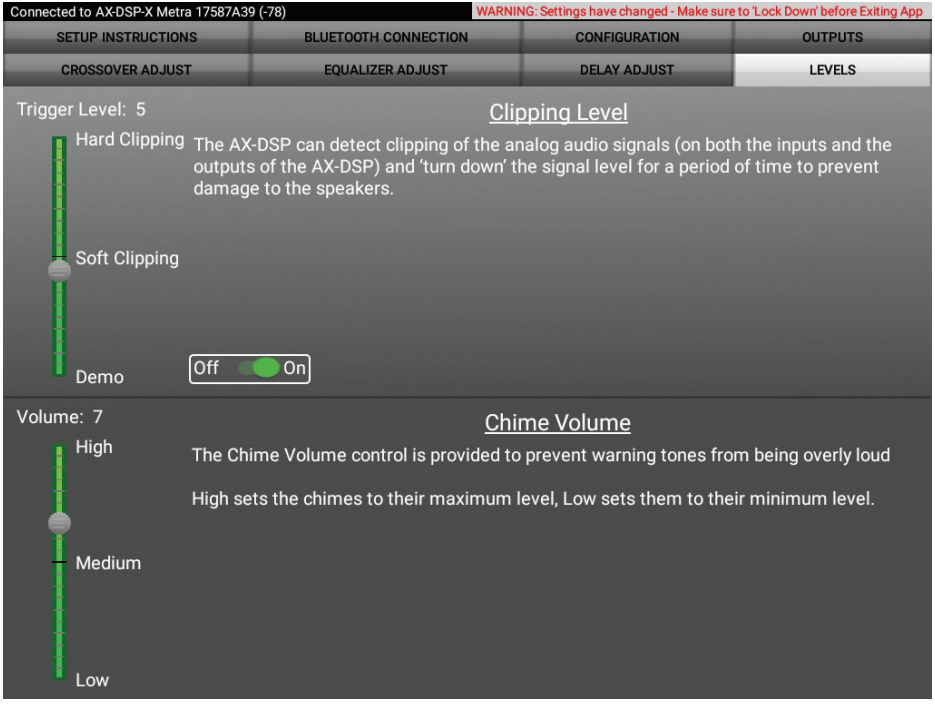

- **Clipping Level** - Use this feature to protect sensitive speakers like tweeters from being driven past their capabilities. If the output signal of the AXDSP-X clips the audio will be reduced by 20dB. Turning down the stereo will allow the audio to come back at a normal level. The sensitivity of this feature can be adjusted to the listening preference of the user.
- **Chime Volume** - Allows the chime volume to be adjusted up or down.

  Note: In newer Ford vehicles chimes will be heard through the gauge cluster if the OEM amplifier is removed

Continued on the next page

Locking Down Data

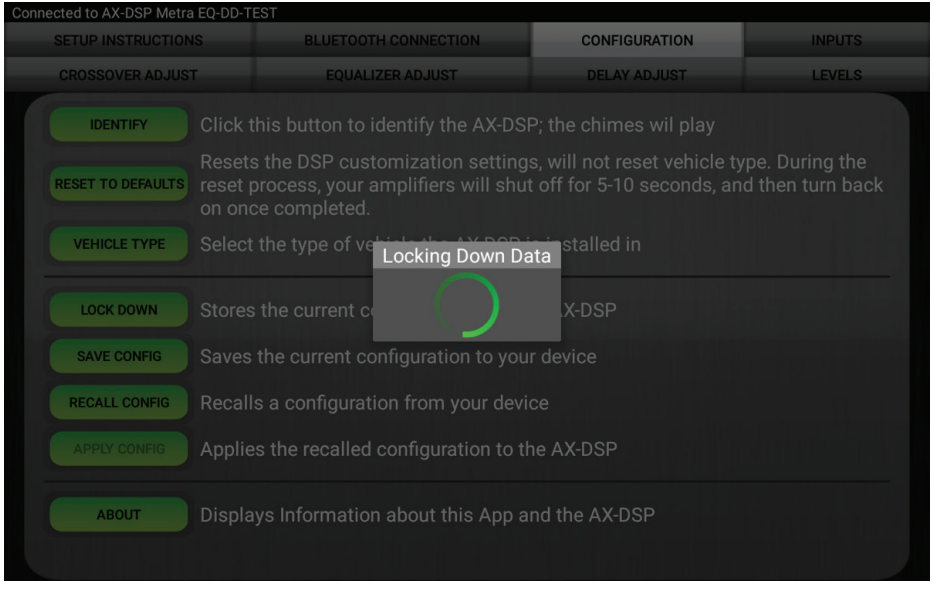

Last and the most important.

You must lock down your configuration!!!

PINOUT

Input Connector

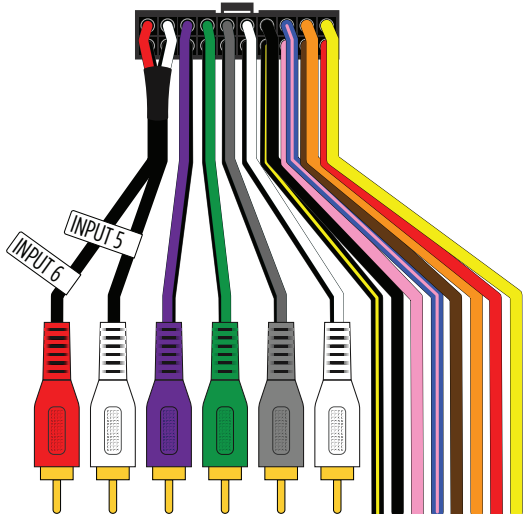

Input 6 - Subwoofer Right Input
Input 5 - Subwoofer Left Input
Purple RCA Jack - Rear Right Input *
Green RCA Jack - Rear Left Input *
Gray RCA Jack - Front Right Input *
White RCA Jack - Front Left Input *
Black/Yellow - Future Use

Black - Chassis Ground
Pink - CAN-HI
Blue/Pink - CAN-LO
Brown - Future Use
Orange - Control Wire for Bass Knob
Red - Accessory Power
Yellow - Battery Power

* Cut off RCA jack for speaker level input

Output Connector

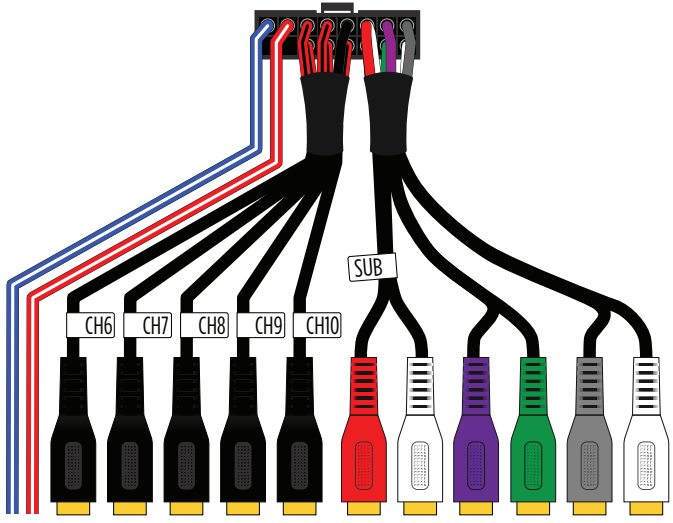

Blue/White - Amp Turn-On
Red/White - Future Use
Channel 6-10 - User Assignable Outputs
Sub RCA Jacks - Use Assignable Outputs

Purple RCA Jack - User Assignable Output
Green RCA Jack - User Assignable Output
Gray RCA Jack - User Assignable Output
White RCA Jack - User Assignable Output

SPECIFICATIONS

Specifications

Input Impedance	1M Ohm
Input Channels	6 High/Low level Selectable
Input Options	High Level or Low Level
Input Type	Differential-Balanced
Input Voltage High Level Range	0 - 28v Peak to Peak
Input Voltage Low Level Range	0 - 4.9v Peak to Peak
Ouput Channels	10
Output Voltage	Up to 5v RMS
Output Impedance	50 Ohms
Equalizer Type	31 Band Graphic EQ, +/- 10dB
THD	<0.03%
Frequency Response	20Hz - 20kHz
Crossover	3-Way LPF, BPF, HPF THP per channel
Crossover Type	Linkwitz-Riley 24DB Slope, Fixed
Sampling	48kHz
S/N Ratio	105dB @ 5V RMS

General

Operating Voltage	10 - 16VDC
Standby Current Draw	~7mA
Operation Current Draw	~150mA
Adjustments/Controls	Application via Bluetooth
Remote Output	12VDC, Signal Sense or with Ignition

Having difficulties? We're here to help.

Contact our Tech Support line at:
1-800-253-TECH

Or via email at:
techsupport@metra-autosound.com

Tech Support Hours (Eastern Standard Time)

Monday - Friday: 9:00 AM - 7:00 PM
Saturday: 10:00 AM - 7:00 PM
Sunday: 10:00 AM - 4:00 PM

KNOWLEDGE IS POWER
Enhance your installation and fabrication skills by enrolling in the most recognized and respected mobile electronics school in our industry. Log onto www.installerinstitute.com or call 800-354-6782 for more information and take steps toward a better tomorrow.

Metra recommends MECP certified technicians

© COPYRIGHT 2020 METRA ELECTRONICS CORPORATION